ISLAND BOOTHS

DEFINITION: SPACES 400 SQUARE FEET OR LARGER WITH AISLES ON ALL FOUR SIDES:

Height

Identification signs canopies and two-story exhibits will be permitted to a maximum height of 18 feet. Unlimited height for equipment **ONLY** is permitted throughout an island booth. (Height permitting)

Intent

When an island booth exceeds 8 feet it does not interfere with other exhibitors because it obviously does not back up against another exhibitor's backwall. The extra height is often required in an island booth exhibit to permit an open walk-through approach normally used in this type of location. The 18 foot maximum height limitation has been set to avoid undue competition between exhibitors to see who can go the highest or be seen the farthest, with each negating the other's efforts. Also, the 18 foot high exhibit will fit into almost any exhibit hall, thus permitting each exhibitor to get maximum use of his exhibit.

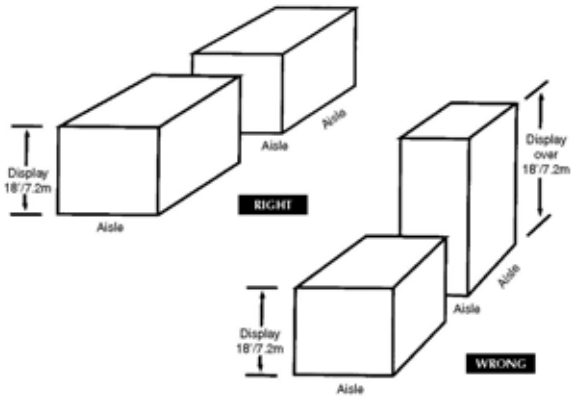

Depth

Since an island booth is automatically separated by the width of an aisle from all neighboring exhibits, full use of the space is permitted.

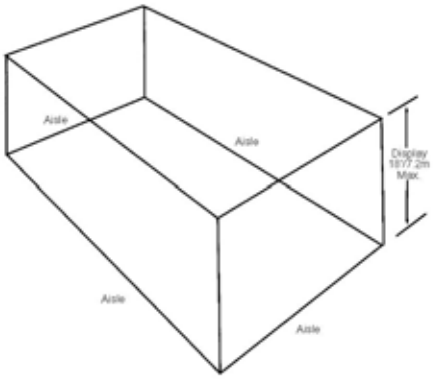

Height
All display material will be confined to a maximum height of 8 feet. Unlimited height is permitted for equipment only; however, every effort should be made to place the equipment in the rear half of the booth and not less than 10 feet from either side of the booth.

Intent
Any portion of an exhibit extending above the 8 foot height draped booth background will detract from the overall impact of the exhibit directly behind that booth regardless of how the rear of the offending exhibit is finished. It is the intent of Show Management to avoid offenses of this type and to assure exhibits will not detrace from other exhibits.

Canopies
Exhibitors using canopies of false ceilings over their exhibit may use vertical supports up to 3 inches in width in the corner of their space. Vertical supports, which are strictly decorative, will not be permitted if the manner in which they are used is not in keeping with the intent of the section on depth.

Intent
To provide reasonable sightline from aisle to the neighboring exhibits as described in the depth section.

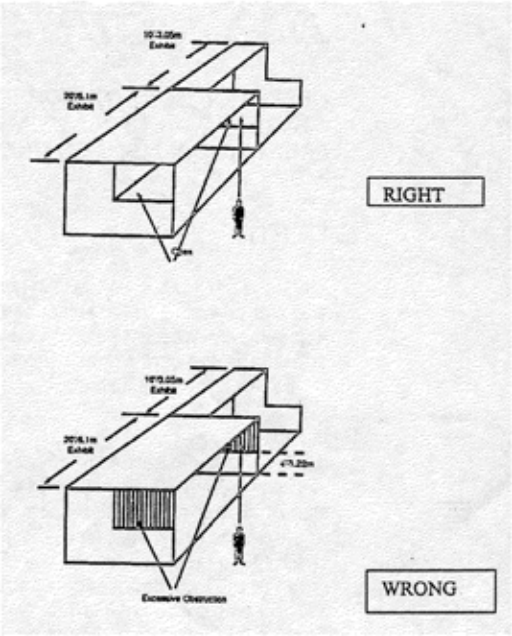
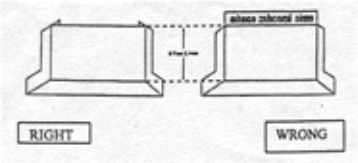
Important
Space dimensions shown on floor plan are from centerline of booth equipment such as side rails and/or back drape. Exhibit structures must be constructed to allow sufficient tolerance on each side for this equipment and for utility service at rear of booth.